New Jersey Semi-Conductor Products, Inc.

20 STERN AVE.
SPRINGFIELD, NEW JERSEY 07081
U.S.A.

TELEPHONE: (973) 376-2922
(212) 227-6005
FAX: (973) 376-8960

TRANSISTORS

JEDEC TYPES #2N1023, 2N1066, 2N1395, 2N1396, and 2N1397

*I. General Description

These transistors are germanium p-n-p "drift" junction types, designed primarily for use in r.f. amplifier circuits in compact military and industrial electronic equipment.

II. Absolute Maximum Ratings

A. Maximum Temperature

*1.	Storage Temperature	-65°C to +100	°C
*2.	Junction Temperature, T_c, (operating)	-65°C to +100	°C

B. Maximum Voltage

*1.	Emitter Base Voltage V_{EB}	-0.5	volt
*2.	Collector Base Voltage, V_{CB}	- 40	volts
3.	Collector Emitter Voltage, V_{CE}	- 40	volts

C. Maximum Current

1.	Emitter Current, I_E	10	ma
2.	Collector Current, I_C	-10	ma

D. Transistor Dissipation (See Fig. 1)

III. Electrical Characteristics, 25°C

A. Static Characteristics

		Min.	Typical	Max.	
1.	Collector Current, I_{CBO} Collector Voltage, V_{CB} (recommended operating voltage) = -12 volts	-	-4	-12	μa
2.	Emitter Current, I_{EBO} Emitter Voltage, V_{EB} = -0.5 volt	-	-1	-12	μa
4.	Collector Breakdown Voltage (BV_{CBO}): For collector current = -50 μa and emitter current = 0	-40	-80	-	volts
5.	Punch-Through Voltage (V_p): For emitter voltage = -0.5 volt and emitter current = 0	-40	-80	-	volts

B. Small Signal Parameters

1. Low Frequency Parameters

Quality Semi-Conductors

Test Conditions

		Min.	Typical	Max.	
Collector Current, I_c = -1.5 ma					
Collector Voltage, V_{CB} = -12 volts					
d. Forward Current Transfer Ratio, h_{fe} Collector Current, I_c=-1.5 ma Collector Voltage = -12 volts Frequency of test = 1 KC	2N1395, 2N1396, 2N1397	50	90	175	
	2N1023, 2N1066	20	60	175	
e. Forward Current Transfer Ratio Cutoff Frequency, f_{ab} I_E = 0	2N1395	-	30	-	Mc
	2N1396	-	100	-	Mc
	2N1023, 2N1066, 2N1397	-	120	-	Mc
f. Output Capacitance, C_{ob} Frequency of test = .140 Mc I_E = 0		-	2	3	μμf
g. Power Gains**					
For collector voltage = -12 volts, emitter current = 1.5 ma, and at signal frequency of: (common-base circuit, emitter input) 50 Mc.	2N1396	15	18	21	db
	2N1023, 2N1066, 2N1397	18	21	24	db
(common-emitter circuit, base input) 30 Mc.	2N1396	16	20	24	db
	2N1023, 2N1066, 2N1397	20	23	26	db
12.5 Mc	2N1396	24	28	32	db
	2N1395	17	22	27	db
1.5 Mc	2N1395	40	45	50	db
h. Input Resistance (AC output circuit shorted): For collector voltage = -12 volts, emitter current = 1.5 ma and at signal frequency of: (common-base circuit, emitter input) 50 Mc.	2N1023, 2N1066, 2N1397	-	25	-	ohms
	2N1396	-	30	-	ohms

		Min.	Typical	Max	
(common-emitter circuit, base input)					
30 Mc.	2N1396	-	50	-	ohms
	2N1023, 2N1066, 2N1397	-	100	-	ohms
12.5 Mc.	2N1396	-	250	-	ohms
	2N1395	-	150	-	ohms
1.5 Mc.	2N1395	-	1350	-	ohms

i. Output Resistance (AC Input circuit shorted):
For collector voltage = -12 volts,
emitter current = 1.5 ma,
and at signal frequency of:

(common-base circuit, emitter input)					
50 Mc.	2N1396	-	5000	-	ohms
	2N1023, 2N1066, 2N1397	-	8000	-	ohms
(common-emitter Circuit, base input)					
30 Mc.	2N1396	-	5000	-	ohms
	2N1023, 2N1066, 2N1397	-	8000	-	ohms
12.5 Mc.	2N1396	-	16000	-	ohms
	2N1395	-	4000	-	ohms
1.5 Mc.	2N1395	-	7000	-	ohms

**Measured in a single-tuned unilateralized circuit matched to the generator and lead impedance for maximum transfer of power (transformer insertion losses not included).

D. Characteristic Curves

2. Static output characteristics:
V_{CE} vs. I_C I_B constant (see Figs. 2 and 3)

4. Normalized small signal parameters vs. frequency
(See Figs. 4, 5, and 6)

6. Max. Transistor Dissipation vs. temp. (See Fig.1)

IV. Thermal Characteristics

	Min.	Typical	Max.
Thermal Resistance (R_T):			
Between junction and case.	-	-	0.31 °C/mw
Between junction and free air.	-	-	0.62 °C/mw

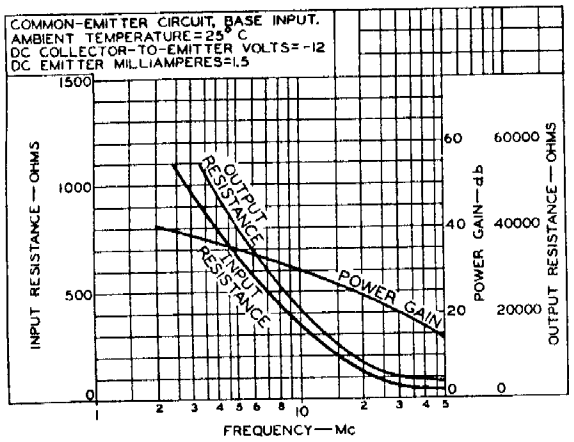

Fig. 5
Performance Characteristics for Type 2N1396

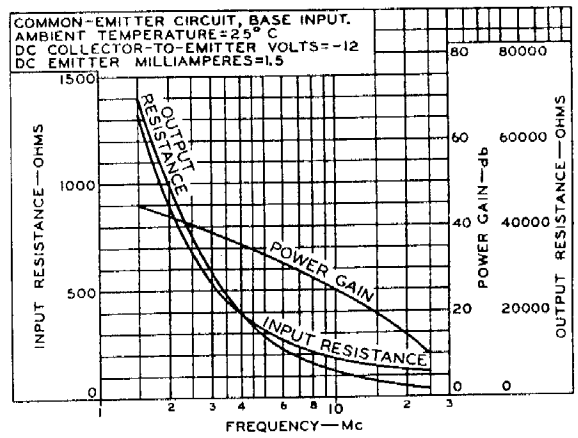

Fig. 6
Performance Characteristics for Type 2N1395

V. Mechanical Data
*A Outline Drawings: TO-44 for Type 2N1023
TO-33 for Type 2N1066, 2N1395, 2N1396 & 2N1397

TO-33

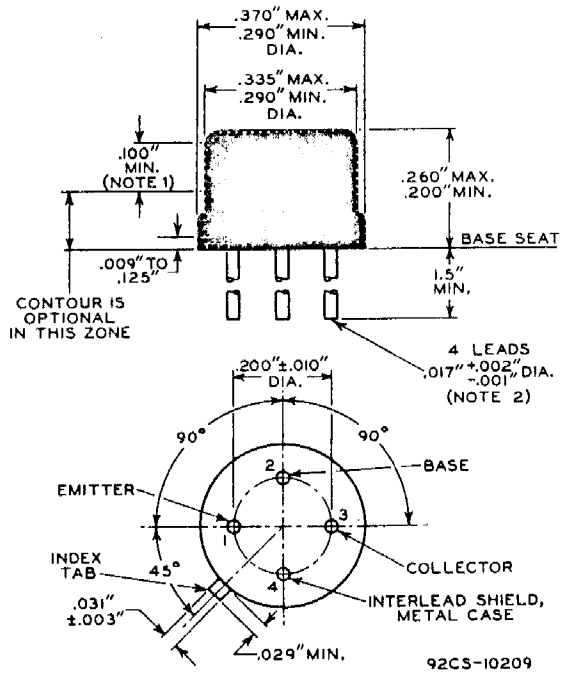

NOTE 1: THE DIAMETER IN THIS ZONE IS CONTROLLED FOR AUTOMATIC HANDLING. THE TOTAL VARIATION IN ACTUAL DIAMETER FROM THE TRUE DIAMETER, DUE TO TAPER AND OUT OF ROUND WITHIN THIS ZONE WILL NOT EXCEED 0.010".

NOTE 2: THE SPECIFIED LEAD DIAMETER APPLIES IN THE ZONE BETWEEN 0.05" AND 0.25" FROM THE BASE SEAT. BETWEEN 0.25" AND 1.5" A MAXIMUM DIAMETER OF 0.021" IS HELD. OUTSIDE OF THESE ZONES THE LEAD DIAMETER IS NOT CONTROLLED.

TO-44

DIMENSIONAL OUTLINE

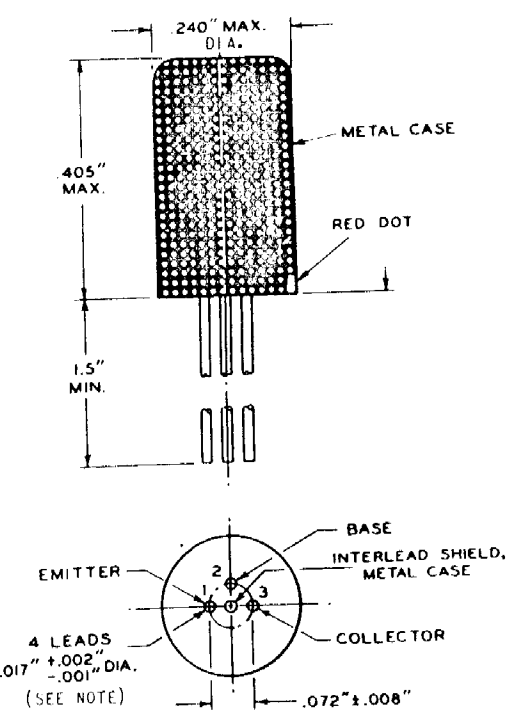

NOTE: THE SPECIFIED LEAD DIAMETER APPLIES IN THE ZONE BETWEEN 0.050" AND 0.250" FROM THE BASE SEAT. BETWEEN 0.250" AND 1.50" A MAXIMUM OF 0.021" DIAMETER IS HELD. OUTSIDE OF THESE ZONES, THE LEAD DIAMETER IS NOT CONTROLLED.